HyGe®

User Guide

Outline

- Unboxing 1
- Product Overview 1
- Quick Start Guide 2
- Functions 2
- Installation Guide 3

Included In The Box

	Qty.
HyGe dispenser	1
Key	2
Mounting screws and wall anchors	4
Battery cradle	1
2 qt. fluid reservoir	1

Product Overview

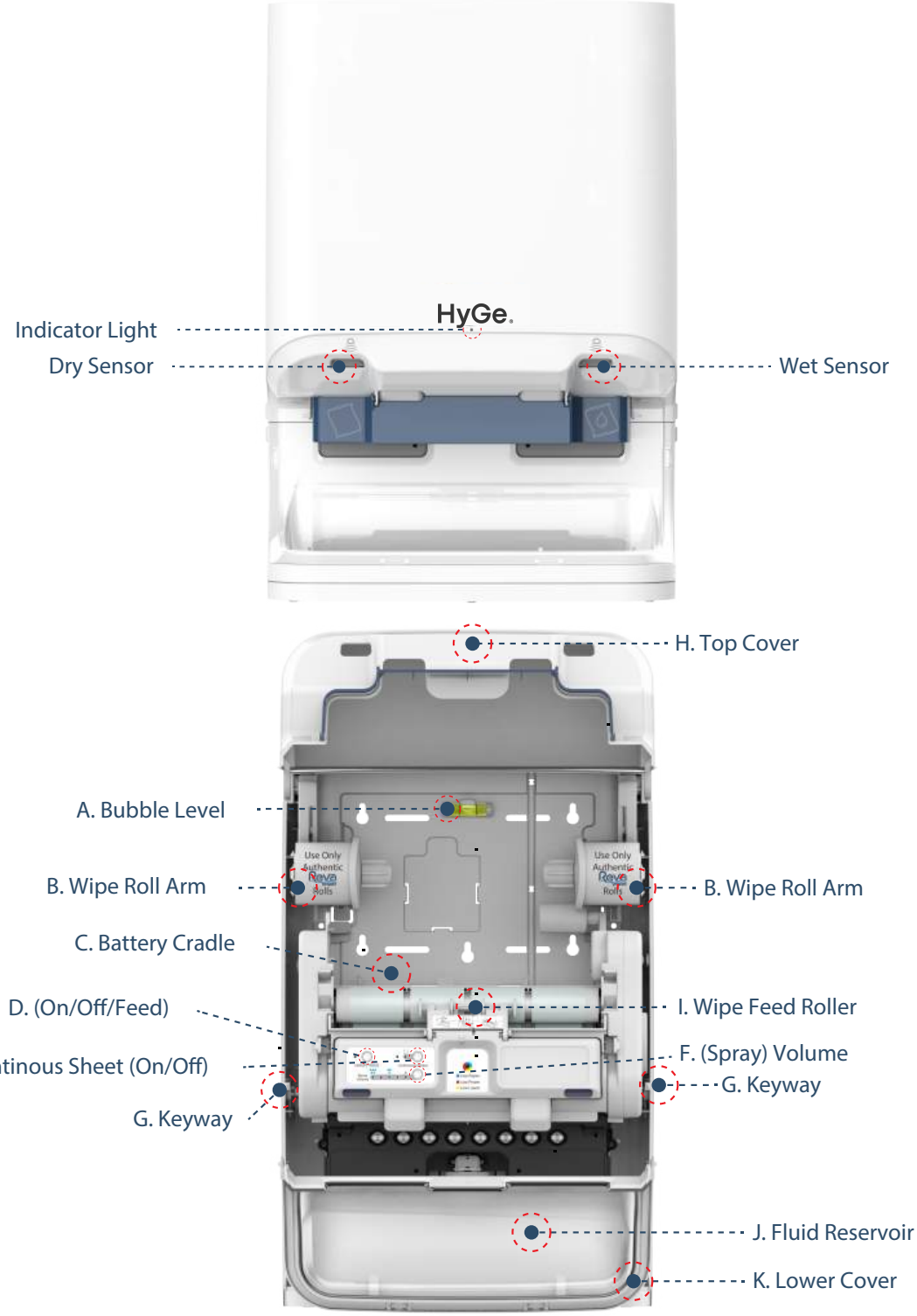

Quick Start Guide

- Insert key into keyway (G), turn slightly and open top cover (H). Once fully open, cover will stay up on its own.
- Remove battery cradle (C), insert 6 c-cell batteries (sold separately) and reinstall.
- Install genuine HyGe Wipe roll in arms (B). Feed roll end into wipe feed roller (I) and press On/Off/Feed Button (D) to advance towel. Press On/Off/Feed (D) again to cycle the towel into position.
- Open lower cover (K) and remove fluid reservoir (J). (Reservoir can be tight to remove for 1st use)
- Remove 2" plug and fill fluid reservoir.
- Label reservoir to ensure all OSHA requirements have been met.
- Install fluid reservoir into machine and close lower cover (K).
- Set the fluid level, For cleaning and disinfection of clinical surfaces, including dental surgery surfaces, set the HyGe unit to saturation level 3 or higher.
- Close and latch top cover (H).
- Cycle the machine using the wet wipe sensor to prime system with fluid and ensure proper wetting of wipe. (1-3 wet wipes may be required to ensure full wetting is achieved)

Smart Dispenser Functions

Dispense wet or dry wipes by holding hand within approximately 2" of selected sensor.

1.On/Off/Feed

- Your Smart Dispenser has a multi-function button used to turn off and on dispenser. This button also feeds towels into mechanism when loading a new roll of HyGe Wipes into dispenser.
- Press and immediately release to feed towel.
- Press and hold button for 3 seconds to power off and on.

2.Continuous Sheet Function

- This function allows up to 5 wet wipes or 5 dry towels to be dispensed consecutively, while hand is held in front of sensor.
- Continuous sheet can be turned on or off with the continuous sheet botton on dispenser.

3.Adjustable Dosage Function

- Wipe saturation volume can be increased or decreased with volume button on dispenser.
- For cleaning and disinfection of clinical surfaces, including dental surgery surfaces, set the HyGe unit to saturation level 3 or higher. Always ensure the surface remains visibly wet for the required disinfectant contact time.

4.Indicator Lights

- Blinking blue light indicates approximately 100 wipes remaining on RevaWipe roll.
- Blinking red light indicates approximately 20% battery life remaining.

5.Cleaning Mode

- Your Smart Dispenser is equipped with a Cleaning Mode lockout function to prevent accidental discharge of wipes while cleaning. To put Smart Dispenser into cleaning mode, block BOTH sensors at the same time for 3 seconds. The light will flash red 3 times to display the unit is in Cleaning Mode. Cleaning mode will automatically deactivate and the machine will go back to normal operation after 20 seconds.

◆ Installation Guide

1.Mounting your Smart Dispenser

Position Selection

- Your Smart Dispenser can be mounted on wall or
- There should be enough space above and around Smart Dispenser to open covers fully for servicing.

- Place empty Smart Dispenser in the desired location of wall, mark 4 mounting holes while observing integrated bubble level.
- Install unit using mounting hardware (included).

2.Powering your Smart Dispenser

Power Caution

- Use only genuine HyGe power adapter.
- Generic adapters can cause damage to your Smart Dispenser.

Your smart dispenser can be powered using:

- 6 C-cell batteries (sold separately)

  Or

- Wall adapter

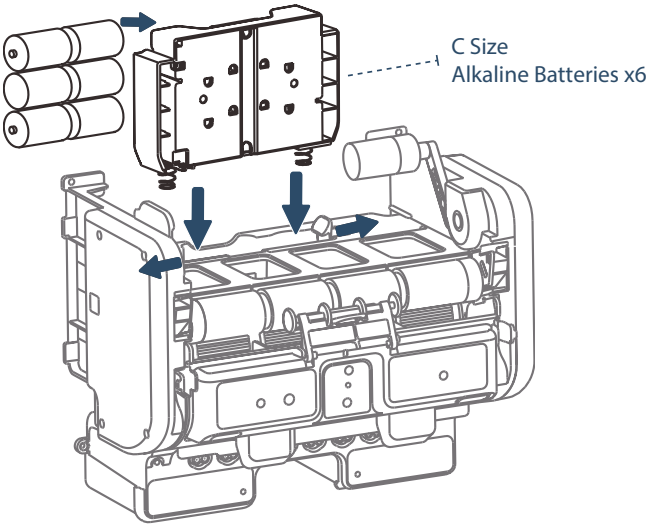

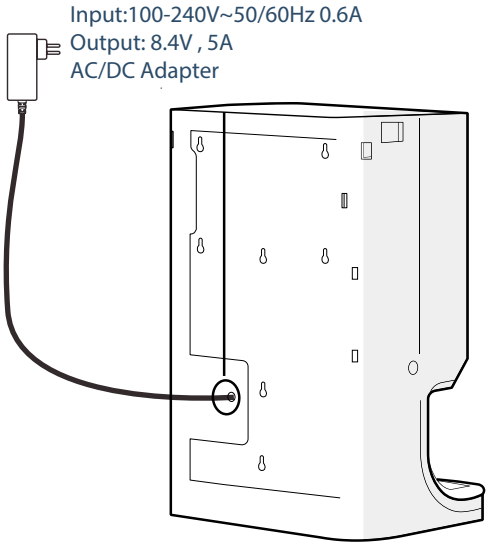

3.Loading your smart dispenser

Wipe Roll Selection

- This dispenser is designed to be used with genuine HyGe Wipe rolls.
- Using non-genuine HyGe Wipe rolls will result in improper dosage and cutting system damage.
- Using non-genuine HyGe Wipe rolls will void warranty.
- HyGe Wipe rolls may be purchased from HyGe dispenser provider or from www.hyge.co.uk

- Install HyGe Wipe roll.
- Press On/Off/Feed button to advance wipe into dispenser.
- Press button again to cycle the dispenser one revolution and ready the wipe into position.

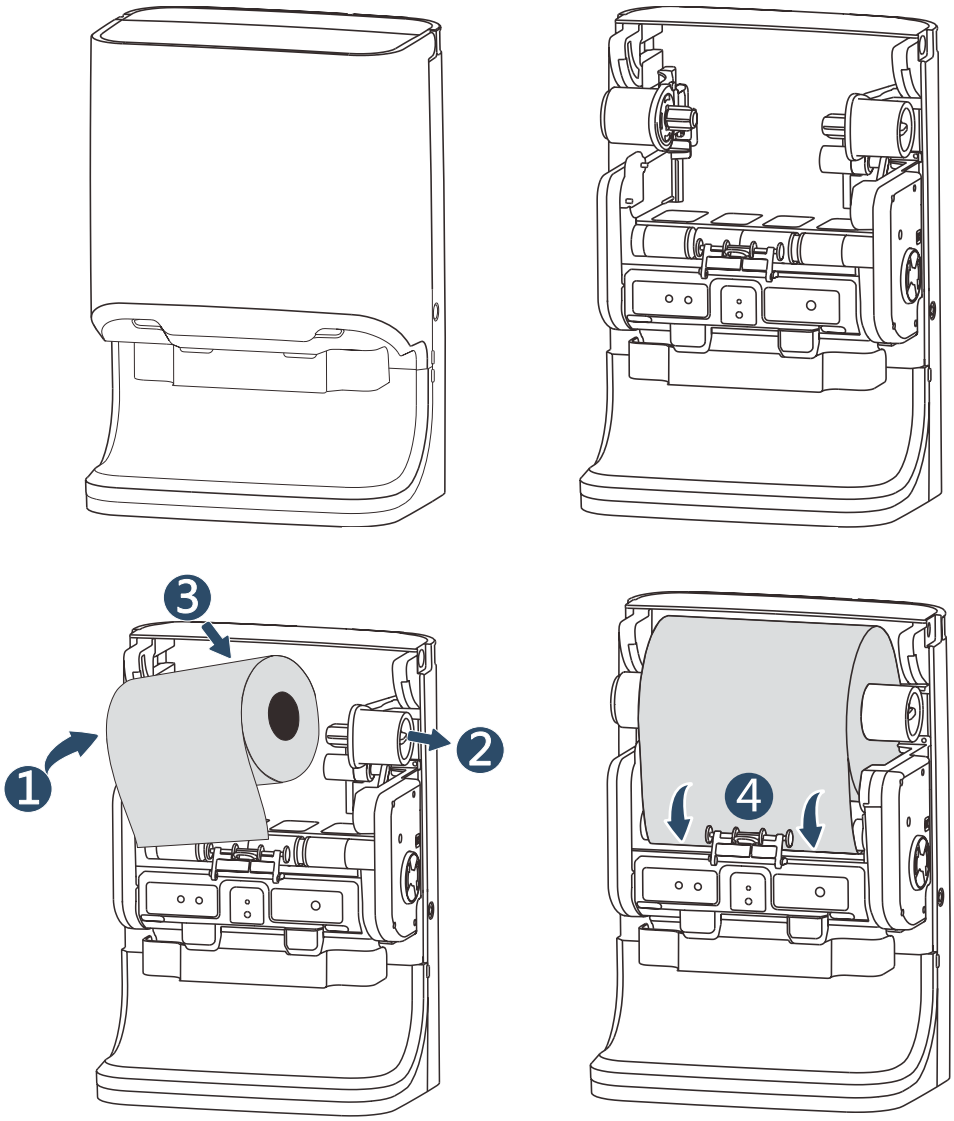

4.Filling Fluid Reservoir

Fluid Selection

- Always follow the fluid manufacturer's directions for use and PPE guidelines.
- For cleaning and disinfection of clinical surfaces, including dental surgery surfaces, set the HyGe unit to saturation level 3 or higher.
- DISSOLVING CONCENTRATE PACKS OR ANY DISSOLVING PLASTICS WILL DAMAGE INTERNAL COMPONENTS AND VOID WARRANTY

- Open top cover.
- Open lower cover, remove fluid reservoir, and fill it with desired fluid.
- Label reservoir to ensure all OSHA requirements have been met.
- Re-install fluid reservoir into dispenser, close lower cover, and latch top cover closed.

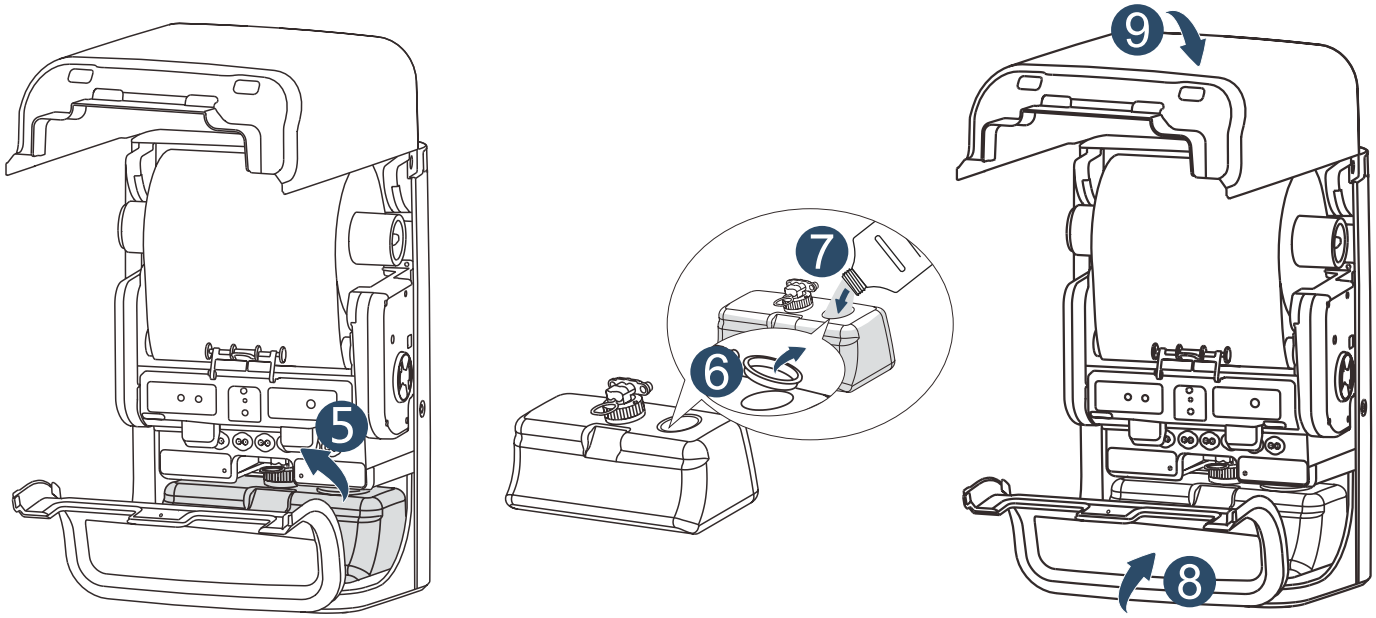

5.Servicing your HyGe Smart Dispenser
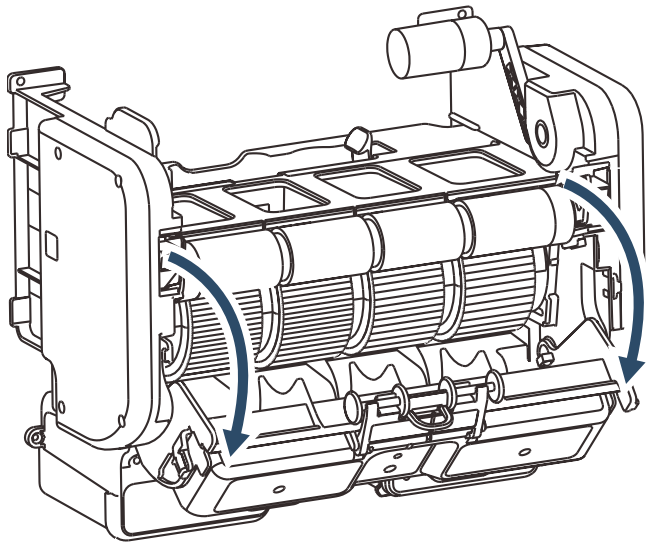
- Blinking blue light indicates approximately 100 wipes remaining on HyGe Wipe roll.
- Blinking red light indicates approx 20% battery life remaining.
- Fluid level can be monitored by visual inspection of the reservoir through front cover.
- When refilling the fluid in the smart dispenser reservoir, it is recommended to fully empty and rinse the fluid reservoir to avoid contamination.
- If changing fluids, it is important to cycle dispenser and discard a minimum of 3 wipes to ensure all old fluid has been evacuated from system before using a wipe.
- Always follow the fluid manufacturer's directions for use and PPE guidelines.
- Operational panel may be opened (below) to clear paper jams, if required.
- After servicing or refilling the dispenser, always ensure the correct saturation setting is selected. For cleaning and disinfection of clinical surfaces, including dental surgery surfaces, set the HyGe unit to saturation level 3 or higher.